MOTO3

Arcluce

LED LUMINAIRES
SUITABLE FOR WET LOCATIONS
LEDS ARE NOT REPLACEABLE

WARNING:

ENG

ANY MODIFICATION TO THIS FITTING IS FORBIDDEN WITHOUT OUR AUTHORIZATION

- Risk of fire/electric shock: turn off power before installation or maintenance.
- Risk of fire/electric shock: fixtures should always be installed, inspected and mainained in accordance with local and national electric codes by qualified electricians only.
- Risk of burning: make sure fixture is cool when performing maintenance.
- Risk of burning: keep fixtures away from materials that may burn.
- Perform electrical and mechanical maintenance on a regular basis at least once per year. Harsh environments might require more frequent controls.
- Do not operate the fixtures with a missing or damaged shield.
- Do not place the fixture in contact with corrosive substances such as fertilizers, weed killers or detergents.
- Fixture screens should be cleaned on regular basis to ensure lighting performance are maintained.
- All gaskets, O-rings and sealing surfaces must be kept clean during installation and service; failure to do this may cause an unsafe condition.
- Read carefully these instruction before installing the fixture and retain for future reference.

Note: specifications and dimensions subject to change without notice.
This data sheet and other technical documents continually updated can be accessed at **www.arcluce-us.com**

TOOLS

- Allen wrench
- Small slotted screwdriver

SPECIFICATION

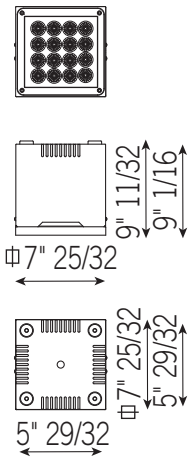

WEIGHT	**9.92 lb**
RATED TA	**25°C**

WIRING	**S**	**R**
Mains Voltage	120 - 277V	
Typical power consumption	**38W**	
Dimming	0-10V	DALI

Data emissione: 2017.05.25
Stato di modifica: MO
Codice: 6555325.11

INSTALLATION

1 Fixture is supplied with 2' supply cord. Remove the four side screws and separate body from housing, see figure 1.
2 Using housing as a template, mark and drill desired location on mounting surface. Secure floodlight to surface using bolts and anchors or lag screws suitable for the specific mounting surface (by others), see figure 2.
3 Wire the fixture according to diagram, see figure 3.
4 Alternatively, it is possible to wire directly in the gearbox, see figure 4.
5 Reassemble body and housing with the four side screws, see figure 5.

1

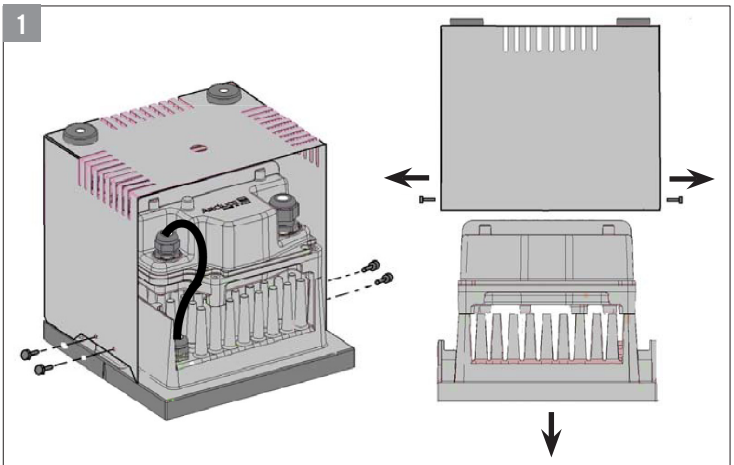

2

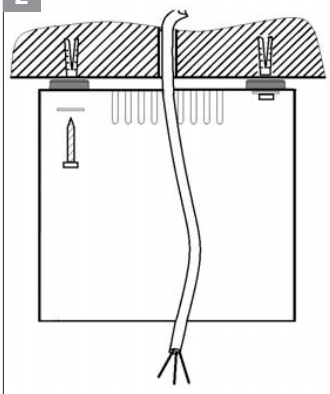

Use only screws and anchors suitable for the mounting surface (by others).

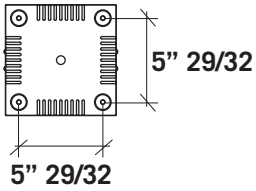

3

OD= Ø 3/8"

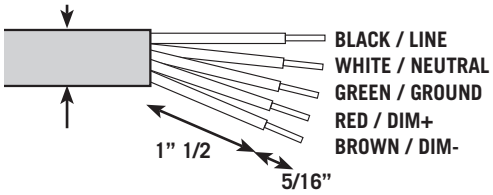

Risk of fire/electric shock:
Make sure the supply voltage or current matches the specified one.

A Use only UL listed waterproof wire nuts to make electrical connections (by others)

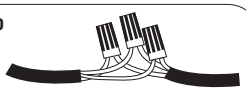

B To prevent moisture penetration from conduit system or cable sleeve use potting compound in the junction box (by others)

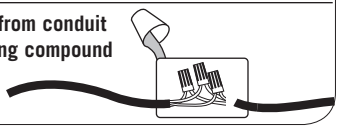

4

Power supply wiring

Thighten the cable gland

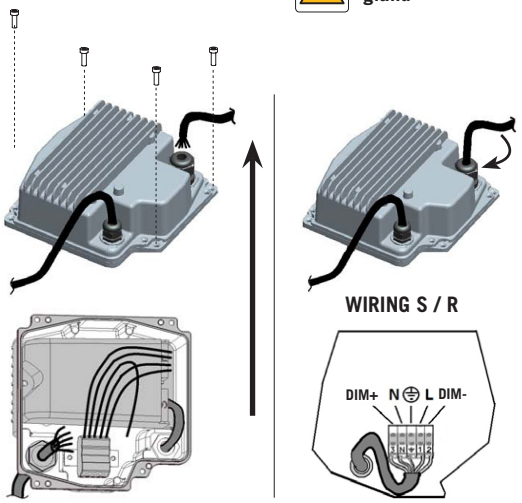

5

Risk of fire/electric shock: make sure the supply voltage or current matches the specified one

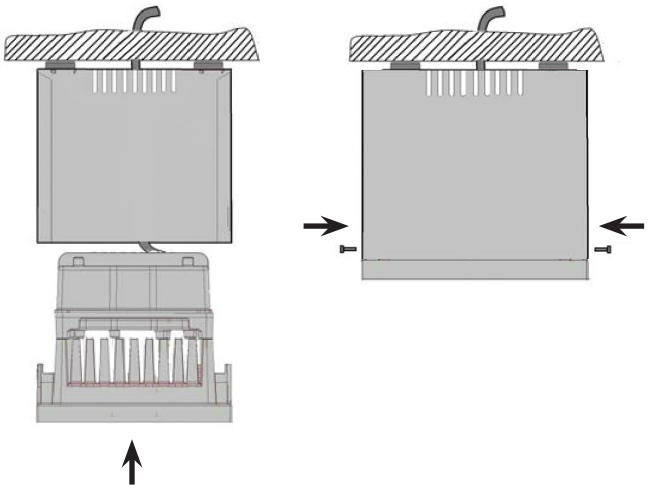

Data emissione: 2017.05.25
Stato di modifica: MO
Codice: 6555325.11